HEAT TREATMENT & FINAL FINISH

PHYSICAL PROPERTIES	
Y.P.	
T.S.	
EL-2	
RED.	
HT. V	
BR.	
SCL.	
C.C.	

D6535501

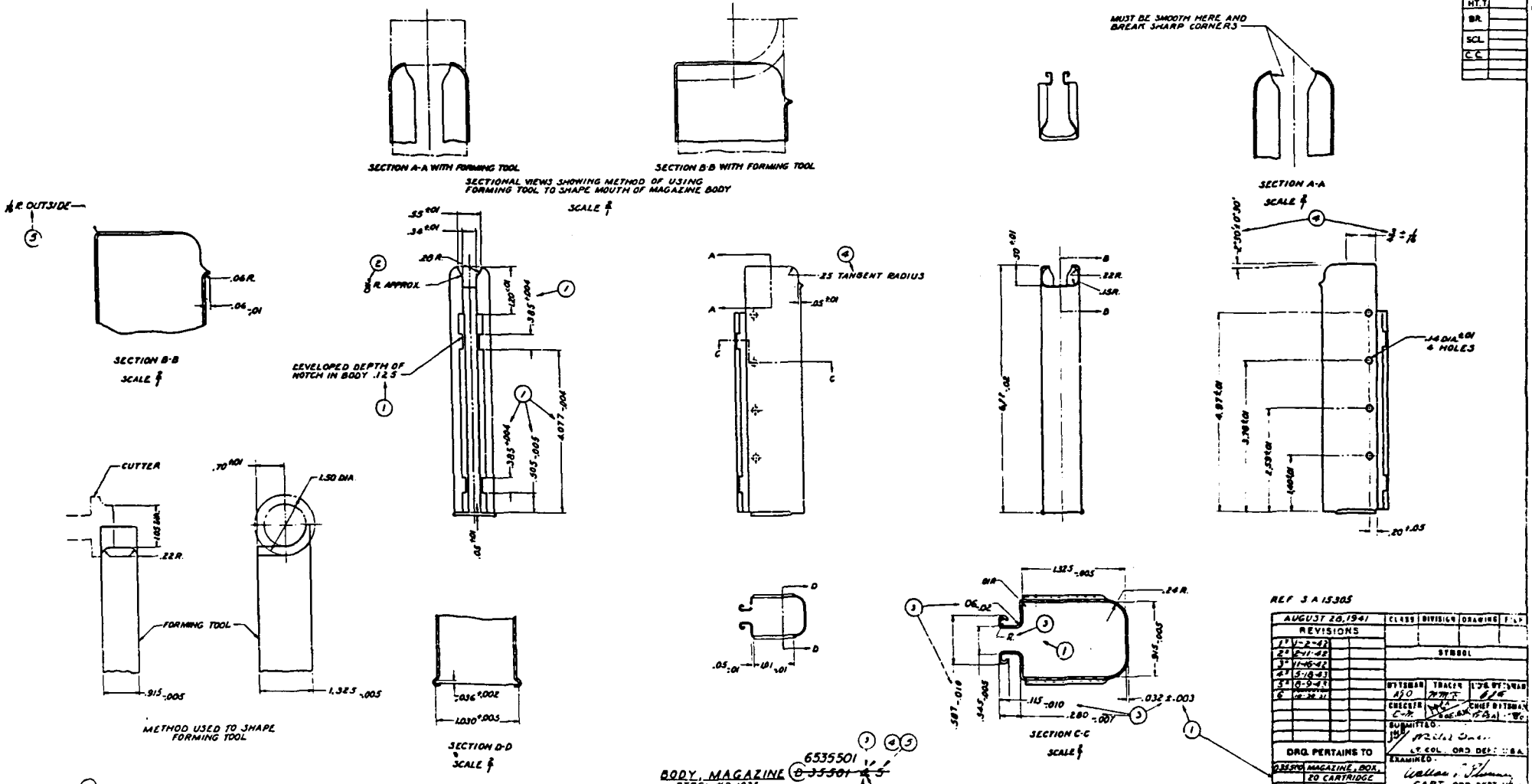

SUPERSEDES D35501