B6147757

HEAT TREATMENT & FINAL FINISH

PHYSICAL PROPERTIES	
Y.P.	
T.S.	
EL.2	
RED.	
BR.	
ROCK.	

APRIL 30, 1942

REVISIONS			
1²	10-9-43		
2'	12-30-43		
3	CONVERSION 10-30-51		

DRG. PERTAINS TO	
51-116	45 S.M.G.-M1
C113678	PLATE, BUTT,
	ASSEMBLY
51-124	45 S.M.G.-M1A1
51-63	45 S.M.G.-M2&A1
C64383	PLATE, BUTT,
	ASSEMBLY

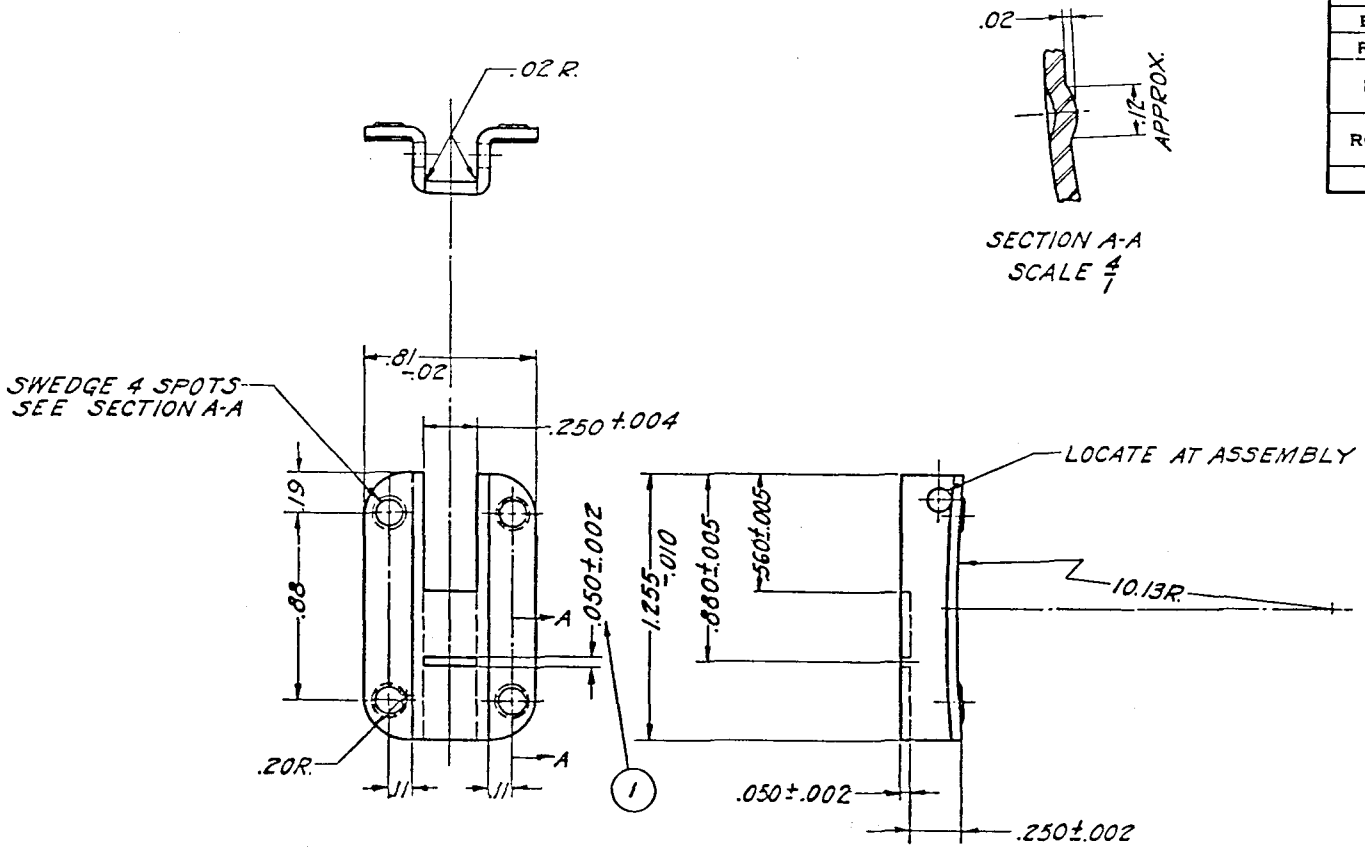

6147757

BRACKET, BUTT PLATE ~~B147757~~ 1

FINISH "f"

MANUFACTURING COMPONENT

REF. DRG. A.O.C. N42-72

SPRINGFIELD ARMORY

TOLERANCE ±.01 ALLOWED ON ALL DIMENSIONS UNLESS OTHERWISE SPECIFIED.

B6147757

SCALE 2/1

~~B147757~~

D'FTSMAN	TRACER	L'DG. D'FTSMAN
CHECKER		CHIEF D'FTSMAN

SUBMITTED:-

COL., ORD. DEPT.

APPROVED BY ORDER OF THE CHIEF OF ORDNANCE:-

COL. ORD. DEPT., U. S. A.

ORDNANCE DEPT., U.S.A.

SUPERSEDES B147757