HEAT TREATMENT & FINAL FINISH

PHYSICAL PROPERTIES	
Y.P.	
T.S.	
EL. 2	
RED.	
BR.	
ROCK.	

APRIL, 30, 1942

REVISIONS			
1	3-3-43		
2	8-30-43		
3	12-30-43		
4	CONVERSION 10-30-51		

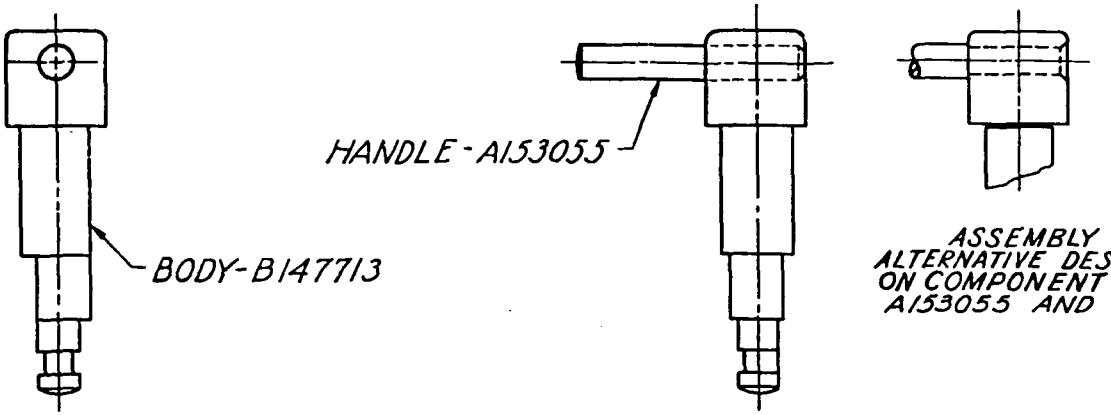

ASSEMBLY OF ALTERNATIVE DESIGN SHOWN ON COMPONENT DRAWINGS A153055 AND B147713

DRG. PERTAINS TO	
51-116	.45 S.M.G-M1
51-124	.45 S.M.G-M1A1
51-63	.45 S.M.G-M28A1

LIST OF COMPONENTS

1	2	3		4
LINE NUMBER	DRAWING NUMBER OR PIECE MARK	NAME OF COMPONENT		NO. REQUIRED PER UNIT ASY.
1	B147719	PIVOT, ROCKER, ASSEMBLY		
2		COMPOSED OF:-		
3	B147713	1-BODY, ROCKER PIVOT	*	
4	A153055	1-HANDLE	*	
5				

PIVOT, ROCKER, ASSEMBLY

6147719

~~B147719-3~~

DFTSMAN	TRACER	L'DG. DFTSMAN
J.P.	J.P.	C.J.H.
CHECKER	O.O. E.G.W.	CHIEF DFTSMAN

SUBMITTED:

COL. ORD. DEPT.

APPROVED BY ORDER OF THE CHIEF OF ORDNANCE:-

COL., ORD. DEPT., U. S. A.

ORDNANCE DEPT., U.S.A.

* WILL NOT BE ISSUED FOR FIELD MAINTENANCE EXCEPT AS COMPONENTS OF AUTHORIZED ASSEMBLIES

0 1 2 INCHES

B6147719

REF. DRG. A.O.C. N-42-30

SPRINGFIELD ARMORY

~~B147719~~

SUPERSEDES B147713