B6147716

REVISIONS			
SYM	DESCRIPTION	DATE	APPROVAL
2		30-30-51	
A	REDRAWN AND REVISED, SEE EO SA 24435	15 JAN 58	
B1	SEE EO NO. SA 25395	16 OCT 59	
C3	SEE EO NO. SA 25915	23 NOV 60	
D	(1-5) SEE EO NO. SA 27712	30 OCT 64	
E	(1-2) SEE EO 82000	5 FEB 68	
F	(2) SEE ERR HQR 30602	8 JAN 73	
G	ERR Z9Z1169B (ECP W9S2019/790629)	891016	ORD-CNT

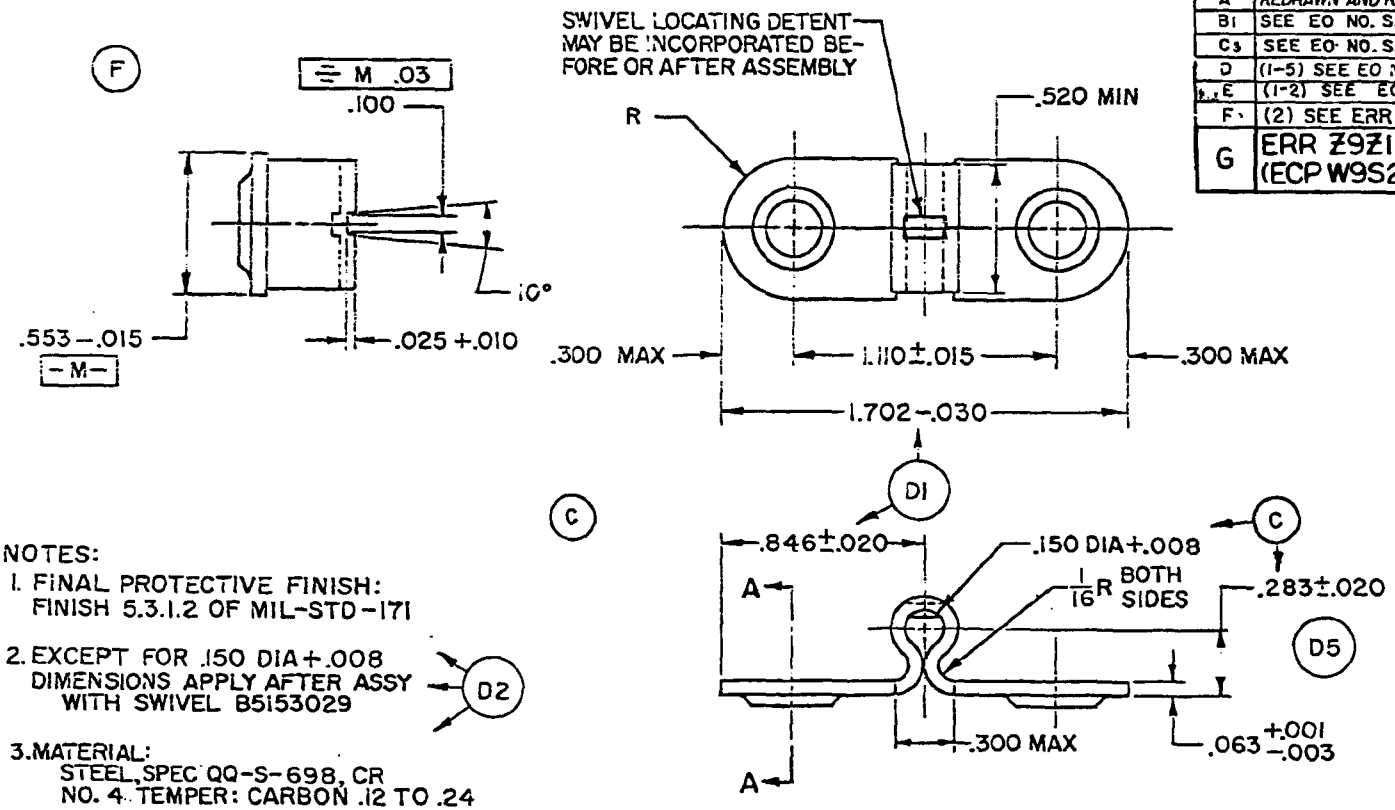

NOTES:

1. FINAL PROTECTIVE FINISH: FINISH 5.3.1.2 OF MIL-STD-171
2. EXCEPT FOR .150 DIA + .008 DIMENSIONS APPLY AFTER ASSY WITH SWIVEL B5153029 (D2)
3. MATERIAL: STEEL, SPEC QQ-S-698, CR NO. 4 TEMPER: CARBON .12 TO .24
4. 250 EDGES ONLY
5. BREAK EDGES .005 + .015 (E1) (B)
6. MIL-W-13855 APPLIES.

(C)

CURRENT DESIGN ACTIVITY CAGE CODE 19200
U.S. ARMY
ARMAMENT RESEARCH, DEVELOPMENT AND ENGINEERING CENTER
PICATINNY ARSENAL, NEW JERSEY 07806-5000

PART NO. 6147716 (E2)

(F) (D3)

	LAUNCHER,	
B6147721	M 79	
NEXT ASSY	USED ON	
APPLICATION		
DO NOT ~~BE~~	APPLY PART NO. ~~AS SPECIFIED~~	

PHYSICAL PROPERTIES	
YP	
TS	
EL2	
RA	
BH	
RH	

UNLESS OTHERWISE SPECIFIED
DIMENSIONS ARE IN INCHES
TOLERANCES ON FRACTIONS ± 1/64 DECIMALS ± .010 ANGLES ± 1°
MATERIAL: SEE NOTE 3
HEAT TREATMENT
FINAL PROTECTIVE FINISH: SEE NOTE 1

ORIGINAL DATE OF DRAWING 30 APR 42
DRAFTSMAN R.E.K. CHECKER
TRACER R.E.K. CHECKER C.R.C.
ENGR R.E.A. ENGR N.W.G.
SUBMITTED N.W. GRANT ORD CORPS
APPROVED BY ORDER OF THE CHIEF OF ORDNANCE H.F. LYNCH ORD CORPS

PLATE, SLING SWIVEL

CODE IDENT NO. 19205
SCALE 2/1 UNIT WT

SPRINGFIELD ARMORY, SPRINGFIELD, MA 01101

DWG SIZE B 6147716
SHEET 1 OF 1

SCANNED DUPLICATE ORIGINAL