B6147690

HEAT TREATMENT & FINAL FINISH

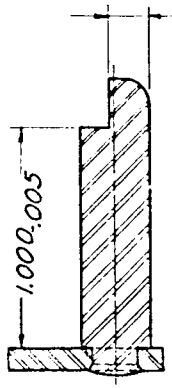

SECTION A-A

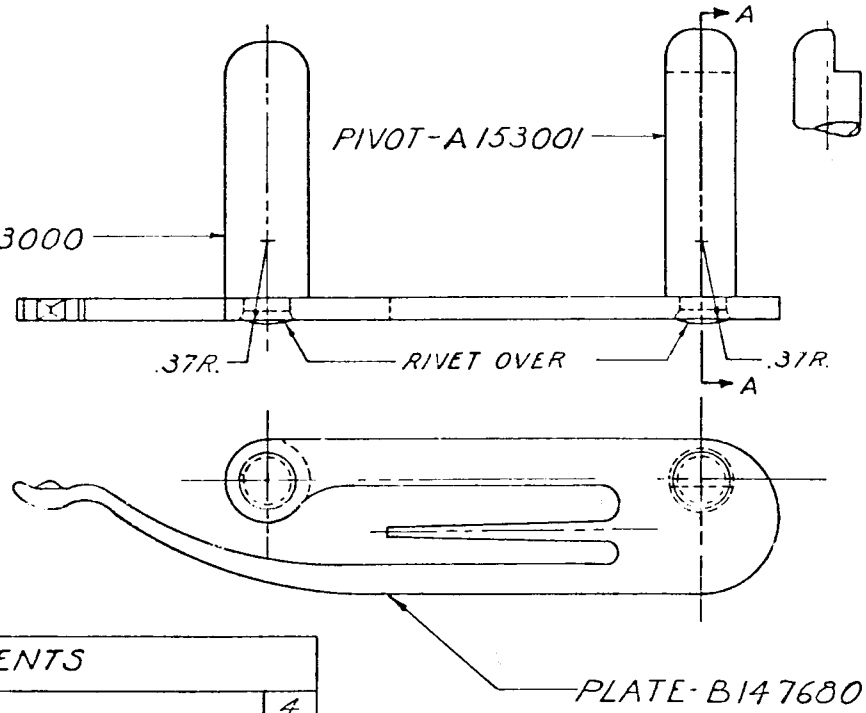

PHYSICAL PROPERTIES	
Y.P.	
T.S.	
EL.2	
RED.	
BR.	
ROCK.	

DEC. 31, 1941

REVISIONS

1	9-30-42			
2	9-30-43			
3	CONVERSION 10-30-51			

DRG. PERTAINS TO

51-63	.45 S.M.G. M28A1
51-116	45 S M G-M1
51-124	.45 S.M.G.-M1A1

LIST OF COMPONENTS

1	2	3	4
LINE NUMBER	DRAWING NUMBER OR PIECE MARK	NAME OF COMPONENT	NO. REQUIRED PER UNIT ASM.
1	B147690	PLATE, PIVOT, ASSEMBLY	1
2		COMPOSED OF:	
3	A 153000	1 - PIVOT, SEAR *	
4	A 153001	1 - PIVOT, TRIGGER *	
5	B 147680	1 - PLATE, PIVOT *	

PLATE, PIVOT, ASSEMBLY 6147690 ~~B 147690-2~~

B6147690

REF. DRG. A.O.C. A 42-89

~~B147690~~

DFTSMAN	TRACER	LDG DFTSMAN
CHECKER		CHIEF DFTSMAN
	EGW	

SUBMITTED:-

LT. COL. ORD. DEPT., U. S. A.

APPROVED BY ORDER OF THE CHIEF OF ORDNANCE:-

COL. ORD. DEPT., U. S. A.

ORDNANCE DEPT. U S A.

* WILL NOT BE ISSUED FOR FIELD MAINTENANCE EXCEPT AS COMPONENTS OF AUTHORIZED ASSEMBLIES.

TOLERANCE ±.01 ALLOWED ON ALL DIMENSIONS UNLESS OTHERWISE SPECIFIED.

0 1 2 INCHES

SUPERSEDES B147690