HEAT TREATMENT & FINAL FINISH

PHYSICAL PROPERTIES	
Y.P.	
T.S.	
EL.2	
RED.	
BR.	
ROCK.	

DEC. 31, 1941

REVISIONS			
1	CONVERSION 10-30-51		

B6147689

DRG. PERTAINS TO	
51-63	.45 SMG-M28A1

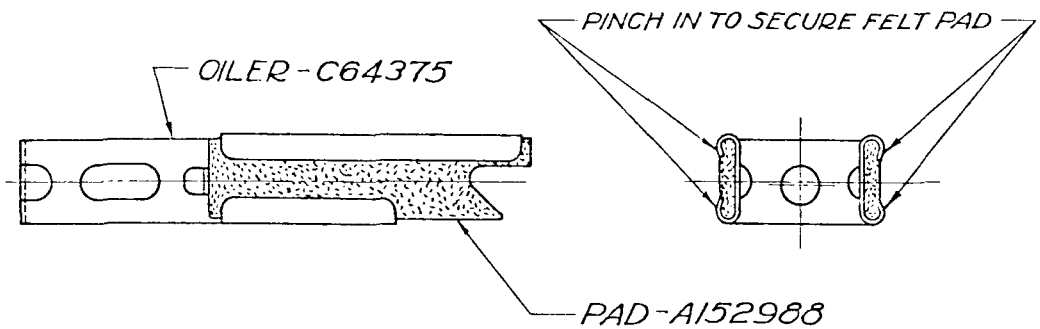

OILER, BREECH, ASSEMBLY ~~B147689~~ 6147689

LIST OF COMPONENTS

1	2	3	4
LINE NUMBER	DRAWING NUMBER OR PIECE MARK	NAME OF COMPONENT	NO REQUIRED PER UNIT
1	B147689	OILER, BREECH, ASSEMBLY	1
2		COMPOSED OF:	
3	C64375	1-OILER, BREECH *	
4	A152988	2-PAD, BREECH OILER *	

* WILL NOT BE ISSUED FOR FIELD MAINTENANCE EXCEPT AS COMPONENTS OF AUTHORIZED ASSEMBLIES.

B6147689

0 1 2 3 4 5 INCHES

REF. DRG. A.O.C. 45-1-8

~~F147689~~

DFTSMAN	TRACER	L'OG. DFTSMAN
H.M.F.	MEKD	C.J.T.
CHECKER		CHIEF DFTSMAN
C.M.	E.G.W.	

SUBMITTED:-

LT. COL. ORD. DEPT. U. S. A.

APPROVED BY ORDER OF THE CHIEF OF ORDNANCE:-

COL. ORD. DEPT. U. S. A.

ORDNANCE DEPT., U. S. A.

SUPERSEDES B147689