HEAT TREATMENT & FINAL FINISH

PHYSICAL PROPERTIES	
Y.P.	
T.S.	
EL.2	
RED.	
BR.	
ROCK.	

DEC. 31, 1941

REVISIONS				
1	CONVERSION 10-30-51			

DRG. PERTAINS TO	
51-63	45SMG-M23A1
B147692	SWIVEL, SLING,
	ASSEMBLY

B6147681

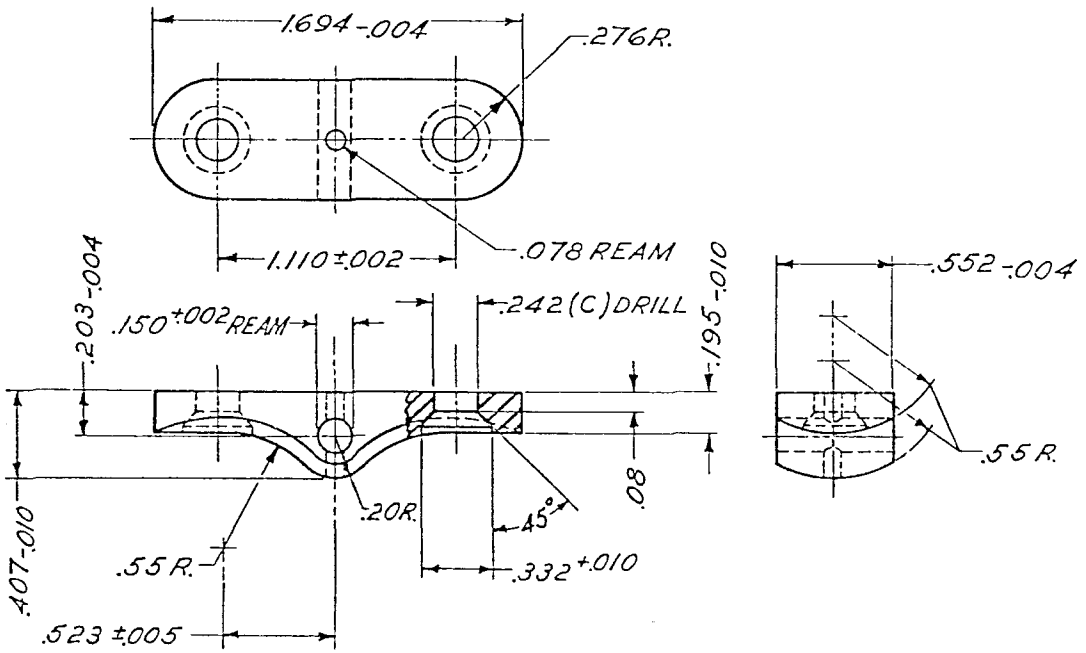

PLATE, SLING SWIVEL ~~B147681~~ 6147681
FINISH "f"
MANUFACTURING COMPONENT

D'FTSMAN	TRACER	L'DG. D'FTSMAN
W.L.H.	D.J.P.	C.J.T.
CHECKER		CHIEF D'FTSMAN
C.M.	S. E.G.W.	S.A.

SUBMITTED:-
LT. COL. ORD. DEPT., U. S. A.

APPROVED BY ORDER OF THE CHIEF OF ORDNANCE:-
LT. COL. ORD. DEPT., U. S. A.

ORDNANCE DEPT., U. S. A.

TOLERANCE ± ALLOWED ON ALL DIMENSIONS UNLESS OTHERWISE SPECIFIED.

B6147681

SCALE 2/1

REF. DRG. A.O.C. 45-1-24

~~B147681~~