HEAT TREATMENT & FINAL FINISH

PHYSICAL PROPERTIES		DEC. 31, 1941 REVISIONS			
Y.P.		1	12-30-43		
T.S.					
EL. 2					
RED.					
BR.					
ROCK.					

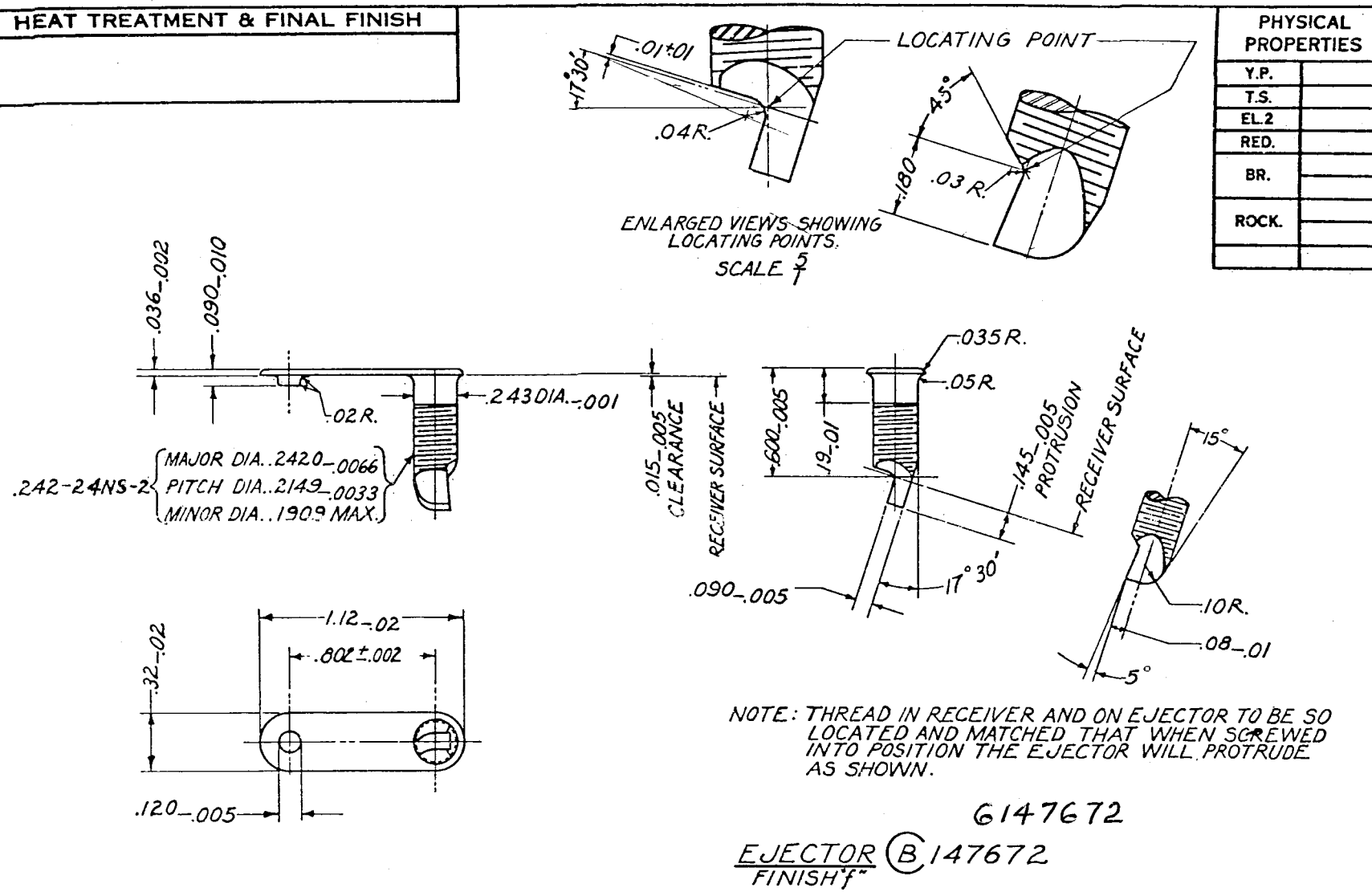

NOTE: THREAD IN RECEIVER AND ON EJECTOR TO BE SO LOCATED AND MATCHED THAT WHEN SCREWED INTO POSITION THE EJECTOR WILL PROTRUDE AS SHOWN.

6147672

EJECTOR (B) 147672
FINISH "f"

REF. DRG. A.O.C. 45-1-4

TOLERANCE ±.01 ALLOWED ON ALL DIMENSIONS UNLESS OTHERWISE SPECIFIED.

SCALE 2/1

B147672

DRG. PERTAINS TO	
51-63	45SMG-M28A1

D'FTSMAN	TRACER	L'DG. D'FTSMAN
BBB	BBB	G.F.T.
CHECKER		CHIEF D'FTSMAN
E.M.	EGW	S.A. O.O.

SUBMITTED:-

LT. COL., ORD. DEPT., U. S. A.

APPROVED BY ORDER OF THE CHIEF OF ORDNANCE:-

COL., ORD. DEPT., U. S. A.

ORDNANCE DEPT., U. S. A.

SUPERSEDED BY NEW TRACING C7310064 UNDER REVISION DATE OF DEC. 30, 1943