HEAT TREATMENT & FINAL FINISH
BLUE IN NITER

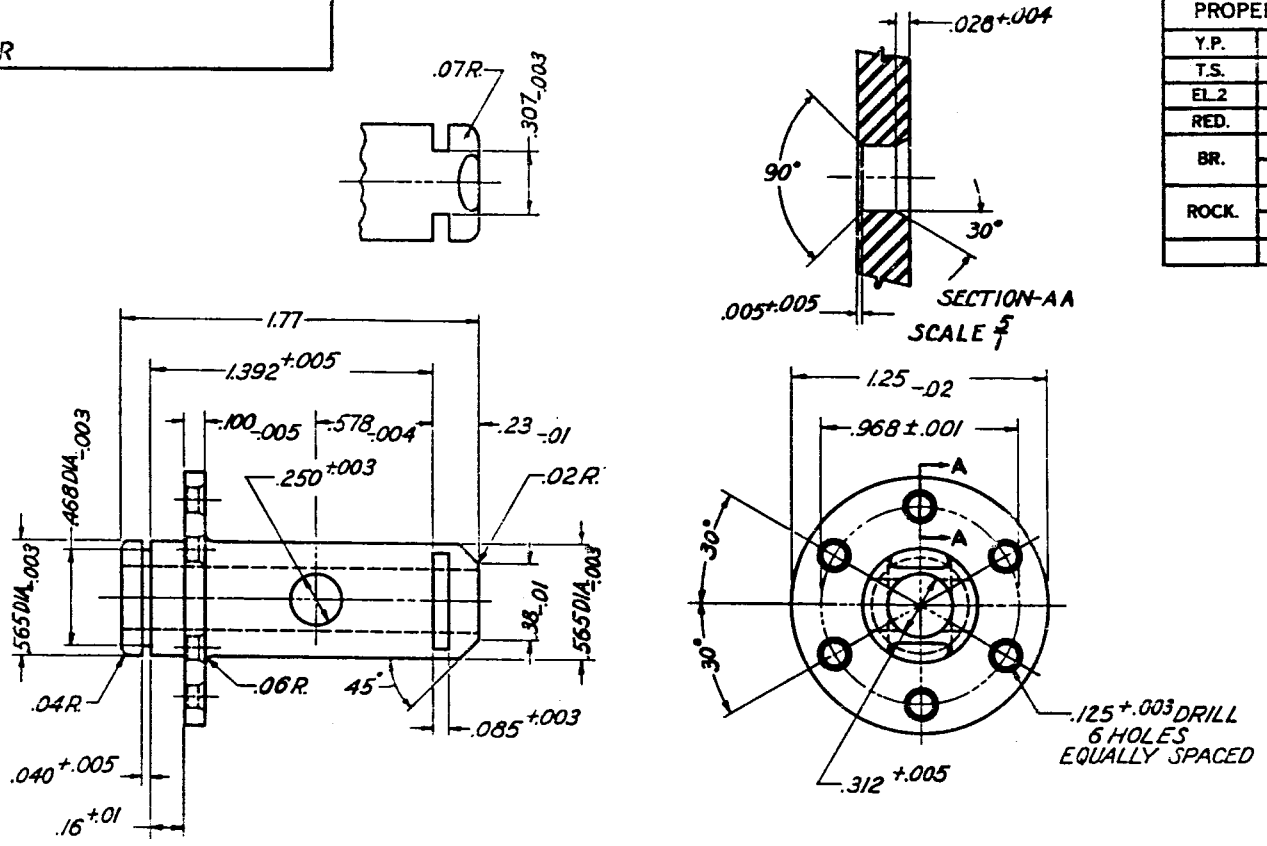

HUB ~~B147652~~ 6147652

STEEL FS B1112 FED SPEC QQ-S-633

FINISH "f"

MANUFACTURING COMPONENT

TOLERANCE ±.01 ALLOWED ON ALL DIMENSIONS UNLESS OTHERWISE SPECIFIED.

B6147652

SCALE 2/1

REF: UNITED AIR CLEANER CO. DRG. NO. 30.019.

~~B147652~~

PHYSICAL PROPERTIES		OCTOBER 20, 1941 REVISIONS			
Y.P.		1 F3	6-13-50		
T.S.		2	CONVERSION 10-30-51		
EL. 2					
RED.					
BR.					
ROCK.					

DRG. PERTAINS TO	
D35505	MAGAZINE, DRUM, 50 CARTRIDGE.
C64363	RATCHET, ASSEMBLY

D'FTSMAN	TRACER	L'DG. D'FTSMAN

CHECKER		CHIEF D'FTSMAN
	EGK	

SUBMITTED:-

LT. COL., ORD. DEPT., U. S. A.

APPROVED BY ORDER OF THE CHIEF OF ORDNANCE:-

COL., ORD. DEPT., U. S. A.

ORDNANCE DEPT., U. S. A.

B6147652

SUPERSEDES B147652