HEAT TREATMENT & FINAL FINISH

PHYSICAL PROPERTIES		OCTOBER 20, 1941 REVISIONS			
Y.P.		1	CONVERSION 10-30-51		
T.S.					
EL.2					
RED.					
BR.					
ROCK.	B-46-47				

DRG. PERTAINS TO	
D35505	MAGAZINE, DRUM, 50 CARTRIDGE
C64358	BODY, MAGAZINE, ASSEMBLY

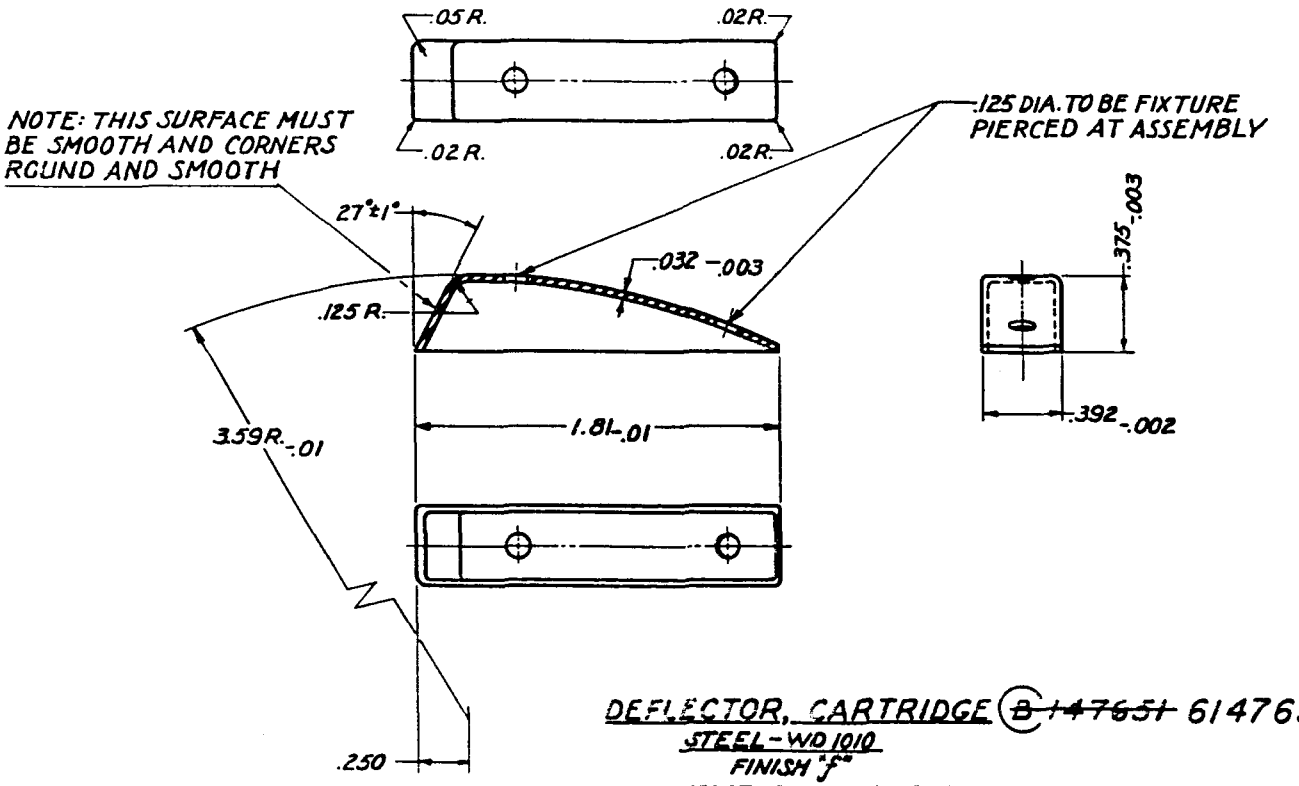

DEFLECTOR, CARTRIDGE ~~B 147651~~ 6147651
STEEL - WD 1010
FINISH "f"
MANUFACTURING COMPONENT

REF: UNITED AIR CLEANER CO. DRG. NO. 30,014

TOLERANCE ±.01 ALLOWED ON ALL DIMENSIONS UNLESS OTHERWISE SPECIFIED.

B6147651

SCALE 2/1

~~B147651~~

D'FTSMAN	TRACER	L'DG. D'FTSMAN
V.W.H.	H.M.F.	G.J.G.
CHECKER	S.A.	CHIEF D'FTSMAN
	EGW	

SUBMITTED:-
LT. COL. ORD. DEPT. U. S. A.

APPROVED BY ORDER OF THE CHIEF OF ORDNANCE:-
COL. ORD. DEPT. U. S. A.

ORDNANCE DEPT., U. S. A.

B6147651

SUPERSEDES B147651