HEAT TREATMENT & FINAL FINISH

PHYSICAL PROPERTIES	
Y. P.	
T. S.	
EL. 2	
RED	
BR.	
ROCK.	
SCL.	

DEC. 31, 1941

REVISIONS

1	10-30-37		

DRG PERTAINS TO

51-63	.45 SMG-M28 A1
C64365	RECEIVER, ASSEMBLY

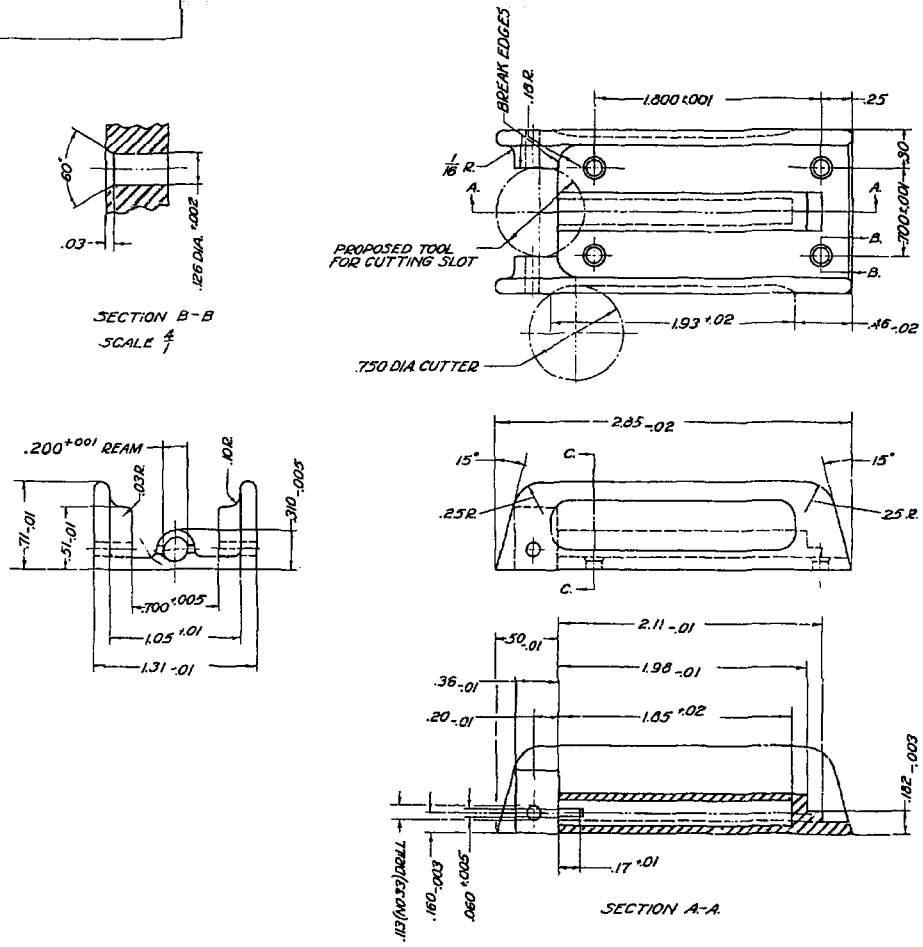

TOLERANCE ±.01 ALLOWED ON ALL DIMENSIONS UNLESS OTHERWISE SPECIFIED.

5564367

BASE, REAR SIGHT ~~C64367~~

FINISH "T"

MANUFACTURING COMPONENT

REF. DRG. A.O.C. 45-7-2

C5564367 SCALE 2/1 ~~C64367~~

SYMBOL		
DFTSMAN H.J.O.	TRACER	LDG DFTSMAN
CHECKER		CHIEF DFTSMAN
SUBMITTED:		
LT. COL. ORD. DEPT. U.S.A.		
APPROVED BY ORDER OF THE CHIEF OF ORDNANCE:		
LT. COL. ORD. DEPT. U.S.A.		
ORDNANCE DEPT. U.S.A.		

SUPERSEDES C64367

C5564367