HEAT TREATMENT & FINAL FINISH
SAND BLAST AFTER ASSEMBLING BODY AND COVER- COLOR SEPARATELY
PENTRATE

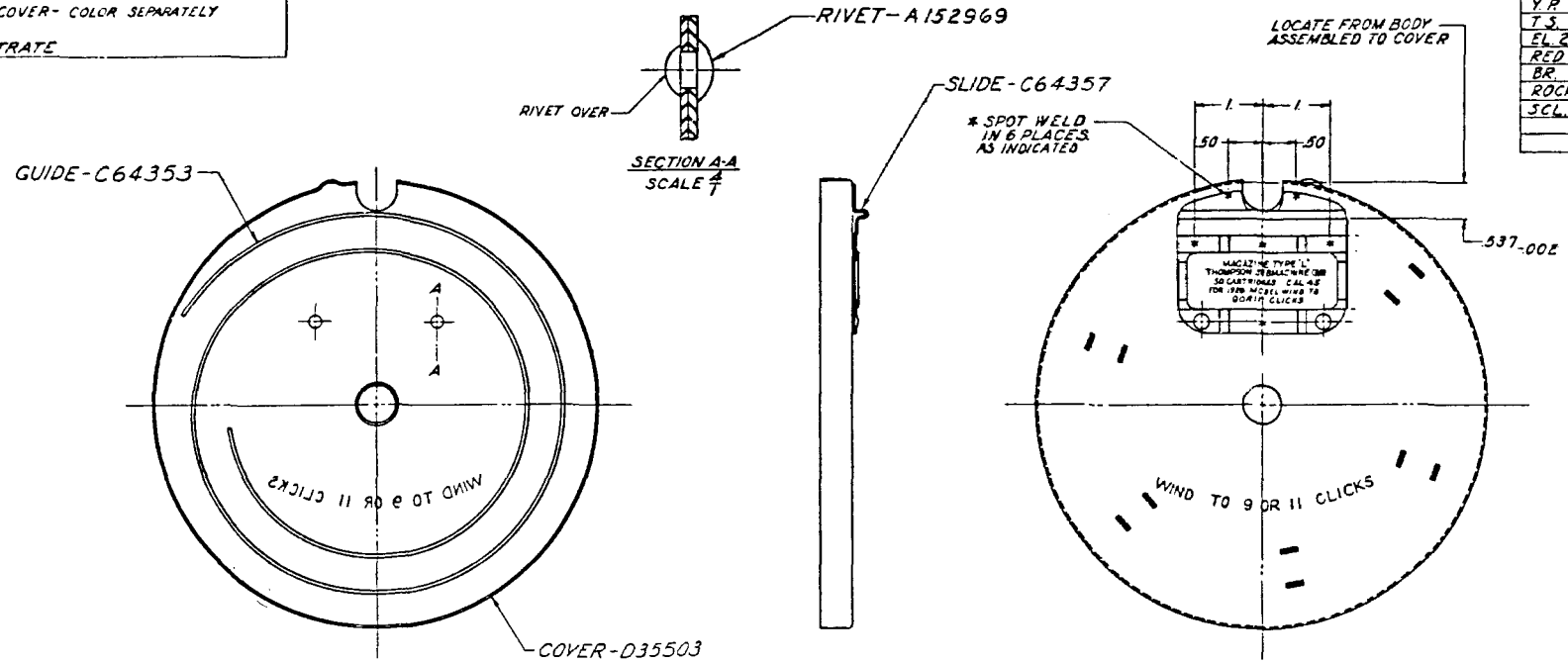

PHYSICAL PROPERTIES	
Y.P.	
T.S.	
EL. 2	
RED	
BR.	
ROCK.	
SCL.	

OCTOBER 20, 1941	
REVISIONS	
1	CONVERT TO 10-30-51

DRG PERTAINS TO	
D35505	MAGAZINE, DRUM 50 CARTRIDGE

C5564361

COVER, MAGAZINE, W/ SLIDE, ASSEMBLY ~~C64361~~ 5564361

LIST OF COMPONENTS			
1	2	3	4
LINE NUMBER	DRAWING NUMBER OR PIECE MARK	NAME OF COMPONENT	NO. REQUIRED PER UNIT ASM.
1	C64361	COVER, MAGAZINE, W/SLIDE, ASSEMBLY	(1)
2		COMPOSED OF:-	
3	C64360	1-COVER, MAGAZINE, ASSEMBLY *	
4	A152969	2-RIVET, MAGAZINE COVER SLIDE *	
5	C64357	1-SLIDE, MAGAZINE COVER *	
6			
7			

* WILL NOT BE ISSUED FOR FIELD MAINTENANCE EXCEPT AS COMPONENTS OF AUTHORIZED ASSEMBLIES

TOLERANCES ±.01 ALLOWED ON ALL DIMENSIONS UNLESS OTHERWISE SPECIFIED

0 1 2 3 4 5 6 7 8 9 10 11 INCHES

C5564361
REF: UNITED AIR CLEANER CO. DRG 50027

~~C64361~~

SYMBOL			