HEAT TREATMENT & FINAL FINISH
SAND BLAST AFTER ASSEMBLING BODY AND COVER-COLOR SEPARATELY
PENTRATE

PHYSICAL PROPERTIES	
Y.P.	
T.S.	
EL. 2	
RED	
BR.	
ROCK.	
SCL.	

OCTOBER 20, 1941

REVISIONS			
1	Conversion 10-30-31		

DR'G PERTAINS TO	
D35505	MAGAZINE, DRUM, 50 CARTRIDGE

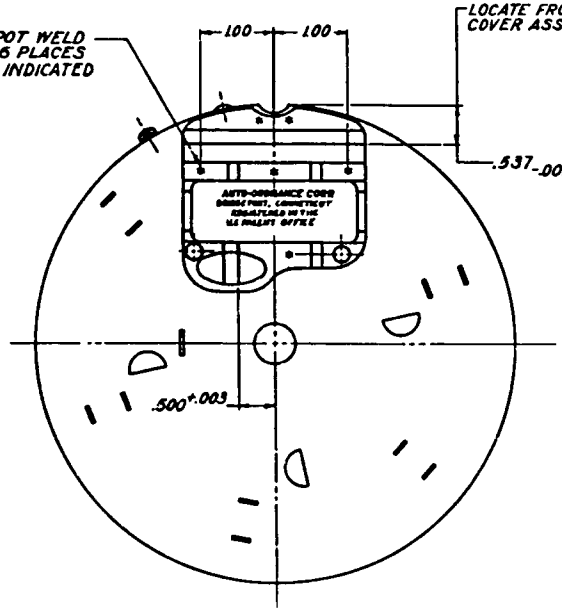

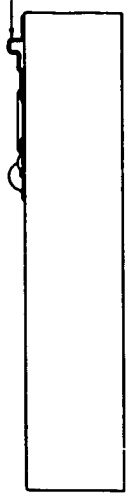

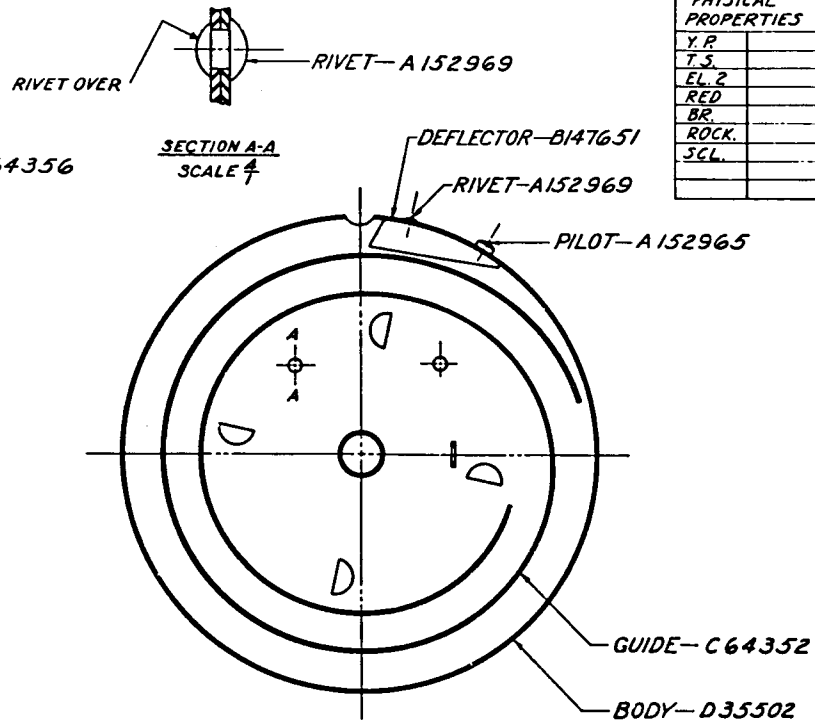

BODY, MAGAZINE, W/SLIDE, ASSEMBLY ~~C64359~~ 5564359

LIST OF COMPONENTS

1	2	3		4
LINE NUMBER	DRAWING NUMBER OR PIECE MARK	NAME OF COMPONENT		NO. REQUIRED PER UNIT ASM.
1	C64359	BODY, MAGAZINE, W/SLIDE, ASSEMBLY		(1)
2		COMPOSED OF:-		
3	C64358	1-BODY, MAGAZINE, ASSEMBLY	*	
4	A152969	2-RIVET, MAGAZINE BODY SLIDE	*	
5	C64356	1-SLIDE, MAGAZINE BODY	*	
6				
7				

*WILL NOT BE ISSUED FOR FIELD MAINTENANCE EXCEPT AS COMPONENTS OF AUTHORIZED ASSEMBLIES

TOLERANCE ±.01 ALLOWED ON ALL DIMENSIONS UNLESS OTHERWISE SPECIFIED.

0 1 2 3 4 5 6 7 8 9 10 11 INCHES

C5564359

REE: UNITED AIR CLEANER CO. DRG. NO. 50.026

~~C64359~~

SYMBOL		
DRAWN WCM	TRACED ASG	DESIGNED AJT
CHECKED	CHECKED EGW	CHIEF DRAFTSMAN
SUBMITTED:		

APPROVED BY ORDER OF THE CHIEF OF ORDNANCE - LT. COLONEL ORD. DEPT. U.S.A.

ORDNANCE DEPT. U.S.A.

SUPERSEDES C64359

C5564359