HEAT TREATMENT & FINAL FINISH

PHYSICAL PROPERTIES	
Y.P.	
T.S.	
EL. 2	
RED	
BR.	
ROCK.	B43-45
SCL.	

OCTOBER 20, 1941

REVISIONS

1	10-20-41	

DRG PERTAINS TO

D35502	MAGAZINE DRUM, .50 CARTRIDGE
C64356	BODY, MAGAZINE W/SLIDE ASSEMBLY

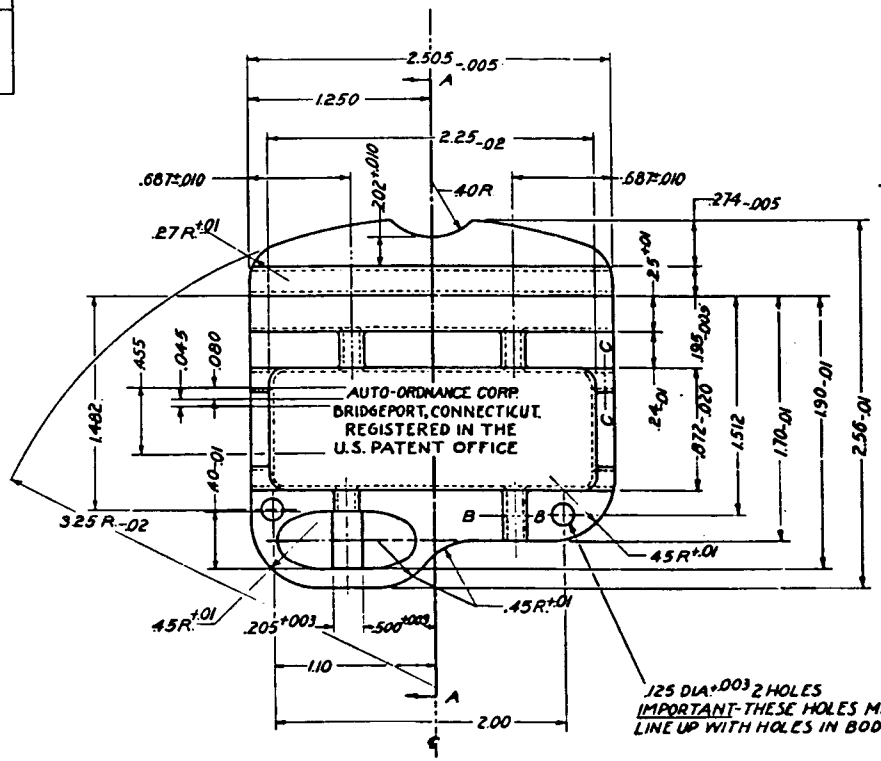

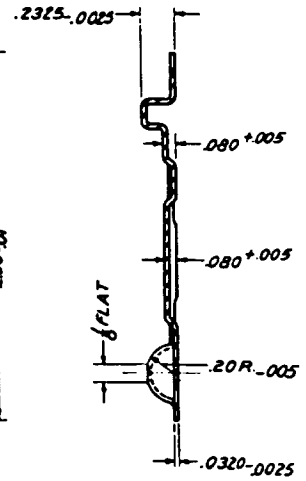

SECTION A-A

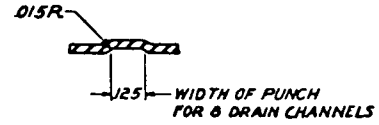

SECTION B-B & C-C
SCALE 4/1

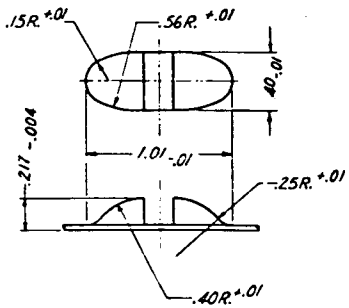

VIEW SHOWING CONSTRUCTION OF FORMATION ON SURFACE OF SLIDE

SLIDE, MAGAZINE BODY ~~C 643.56~~ 5564356

STEEL-WD 1010

FINISH

MANUFACTURING COMPONENT

TOLERANCE ± ALLOWED ON ALL DIMENSIONS UNLESS OTHERWISE SPECIFIED.

C5564356

SCALE 2/1

REF. UNITED AIR CLEANER CO. DRG. NO. 50,018

~~C 64356~~

SYMBOL

DETAILER W.J.B.	TRACER W.J.M.	LEAD DETAILER J.K.
CHECKER R.G.S.		CHIEF DETAILER
SUBMITTED:		

LT COL. ORD DEPT U.S.A.

APPROVED BY ORDER OF THE CHIEF OF ORDNANCE

LT. COL. ORD DEPT. U.S.A.

ORDNANCE DEPT U.S.A.

SUPERSEDES C64356

C5564356