HEAT TREATMENT & FINAL FINISH
ANNEAL AFTER BLANKING.
PENTRATE

PHYSICAL PROPERTIES	
Y.P.	
T.S.	
EL. %	
RED.	
B.H.	
ROCK.	B-34-41
SCL.	

OCTOBER 20, 1941

REVISIONS		
1	CONVERSION 10-30-51	

DRG PERTAINS TO	
035505	MAGAZINE, DRUM, 50 CARTRIDGE
035504	ROTOR ASSEMBLY

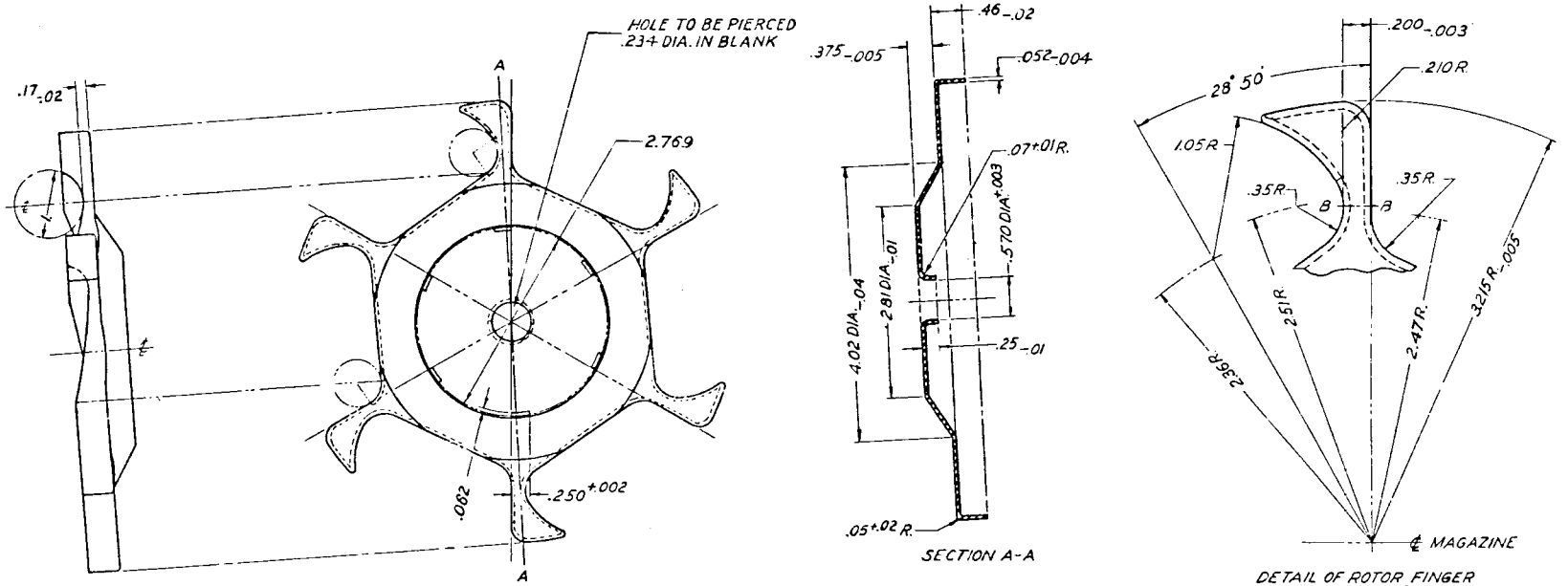

ROTOR (E) ~~C64355~~ 5564355
STEEL-WD. 1010
FINISH f
MANUFACTURING COMPONENT

TOLERANCE ± ALLOWED ON ALL DIMENSIONS UNLESS OTHERWISE SPECIFIED.

C5564355

REF: UNITED AIR CLEANER CO. DRG. NO. 50,033

SCALE 1/1

~~C 64355~~

SYMBOL	
DETAILMAN	TRACED
9 W 4	E.G.W.
CHECKED	
SUBMITTED	
LT. COL. ORD. DEPT. U.S.A.	
APPROVED BY ORDER OF THE CHIEF OF ORDNANCE	
COL. ORD. DEPT. U.S.A.	
ORDNANCE DEPT. U.S.A.	

SUPERSEDES C64355

C5564355