~~A 153115~~

A5153115

HEAT TREATMENT & FINAL FINISH	PHYSICAL PROPERTIES						APRIL 30, 1942
	Y.P.		RED.		ROCK.		REVISIONS
	T.S.		BR.				1 12-30-43
	EL.2						2 CONVERSION 10-17-51

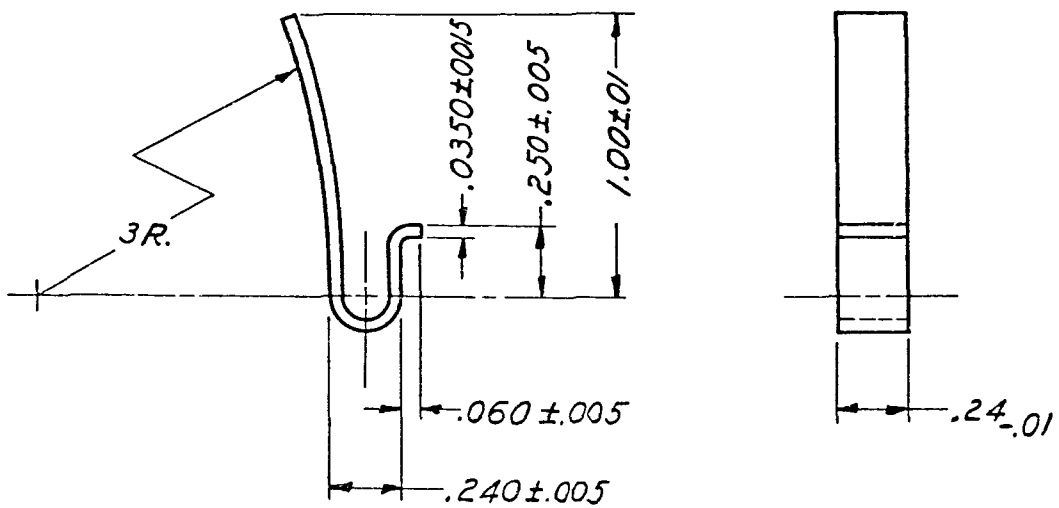

DR'G. PERTAINS TO	
51-116	.45 S.M.G.-M1
C113679	PLATE, BUTT,
	W/CAP, ASM.
51-124	.45 S.M.G.-M1A1
51-63	.45 S.M.G.-M28A1
C64384	PLATE, BUTT,
	W/CAP, ASS'Y

SPRING, BUTT PLATE
FINISH "f"

5153115
~~A 153115~~

REF. DRG. A.O.C. 42-74
SPRINGFIELD ARMORY

TOLERANCE ±.01 ALLOWED ON ALL DIMENSIONS UNLESS OTHERWISE SPECIFIED.

SCALE 2/1

A5153115

~~A 153115~~

D'FTSMAN	TRACER	L'DG. D'FTSMAN
CHECKER		CHIEF D'FTSMAN
	E.G.W.	

SUBMITTED:-

COL., ORD. DEPT.

APPROVED BY ORDER OF THE CHIEF OF ORDNANCE:-

COL., ORD. DEPT., U. S. A.

ORDNANCE DEPT., U. S. A.

SUPERSEDES A153115