~~A 153023~~

A5153023

HEAT TREATMENT & FINAL FINISH	PHYSICAL PROPE.....S						DEC. 31, 1941
	Y.P.		RED.		ROCK.		REVISIONS
	T.S.		BR.				1 CONVERSION 10-11-39
	EL.2						

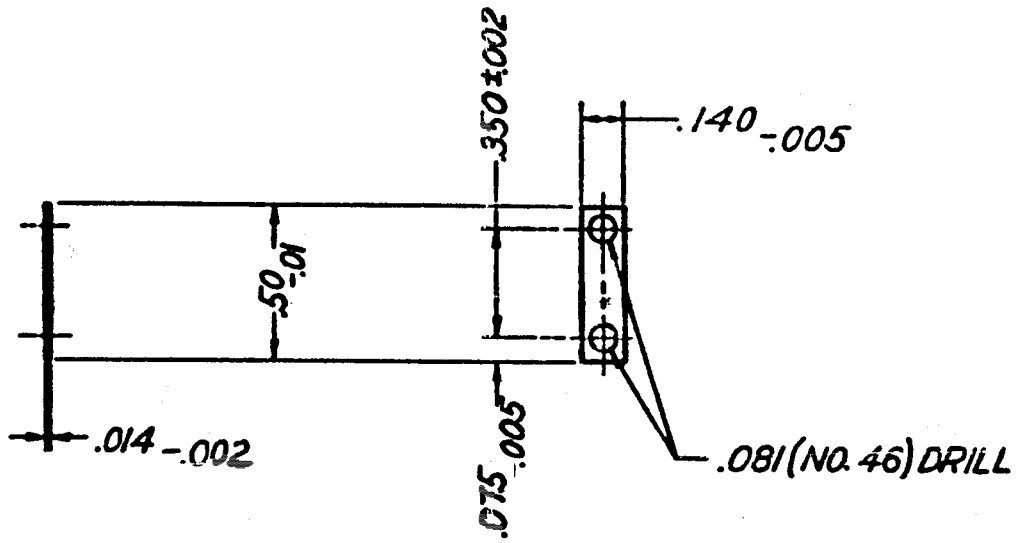

DR'G. PERTAINS TO

51-63	.45 S.M.G.-M28A1
~~B147688~~	CATCH, REAR SIGHT
	SLIDE, ASSEMBLY

D'FTSMAN	TRACER	L'DG. D'FTSMAN
H.M.F.	Y.W.B.	G.J.K.
CHECKER		CHIEF D'FTSMAN
G.M.	EGW	

SUBMITTED:-
Lt. Col. Ord. Dept., U. S. A.

APPROVED BY ORDER OF THE CHIEF OF ORDNANCE:-
Lt. Col. Ord. Dept., U. S. A.

ORDNANCE DEPT., U. S. A.

SPRING, REAR SIGHT SLIDE CATCH

5153023 ~~A 153023~~

FINISH "f"

MANUFACTURING COMPONENT

TOLERANCE ±.01 ALLOWED ON ALL DIMENSIONS UNLESS OTHERWISE SPECIFIED.

SCALE 2/1

REF. DRG. A.O.C. 45-7-3 A5153023

~~A 153023~~