HEAT TREATMENT & FINAL FINISH	PHYSICAL PROPERTIES						DEC. 31, 1941
	Y.P.		RED.		ROCK.		REVISIONS
	T.S.		BR.				1 CONVERSION 10-17-51
	EL.2						

A5153012

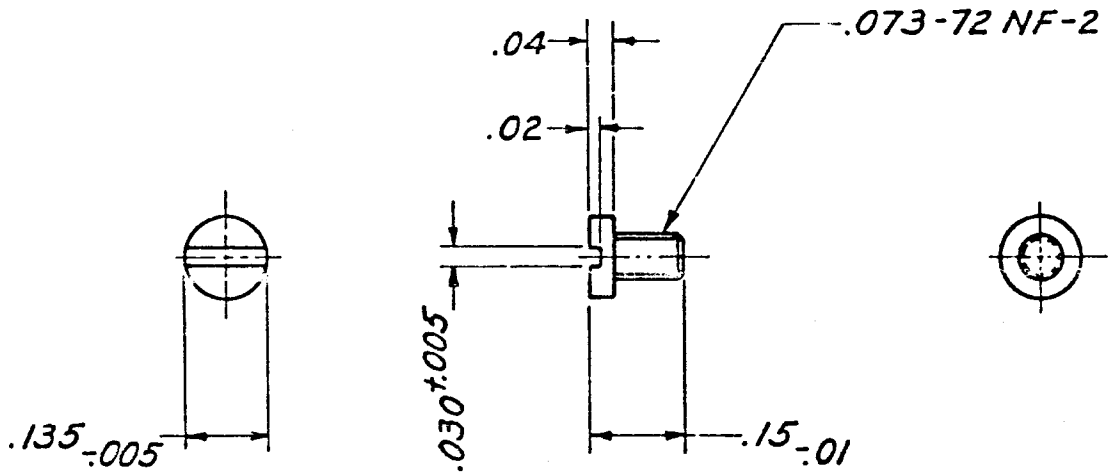

DR'G. PERTAINS TO	
51-63	.45 SMG.-M28A1
C64382	LEAF, REAR SIGHT, ASM

D'FTSMAN	TRACER	L'DG D'FTSMAN
H.M.F.	H.M.F.	G.J.T.
CHECKER	S.A. O.O. EGW	CHIEF D'FTSMAN

SUBMITTED:-
LT. COL., ORD. DEPT., U. S. A.

APPROVED BY ORDER OF THE CHIEF OF ORDNANCE:-
W. Moore
LT. COL. ORD. DEPT., U. S. A.

ORDNANCE DEPT., U. S. A.

SCREW, REAR SIGHT SLIDE CATCH 5153012 ~~A 153012~~
FINISH "f"

REF. DRG. A.O.C. 45-7-3
A5153012
~~A 153012~~

TOLERANCE ±.01 ALLOWED ON ALL DIMENSIONS UNLESS OTHERWISE SPECIFIED.

SCALE 4/1

SUPERSEDES A153012