~~A 153011~~

A 5153011

HEAT TREATMENT & FINAL FINISH	PHYSICAL PROPERTIES					
	Y.P.		RED.		ROCK.	
	T.S.		BR.			
	EL.2					

DEC. 31, 1941

REVISIONS			
1[3]	9-30-42		
2	CONVERSION 10-17-51		

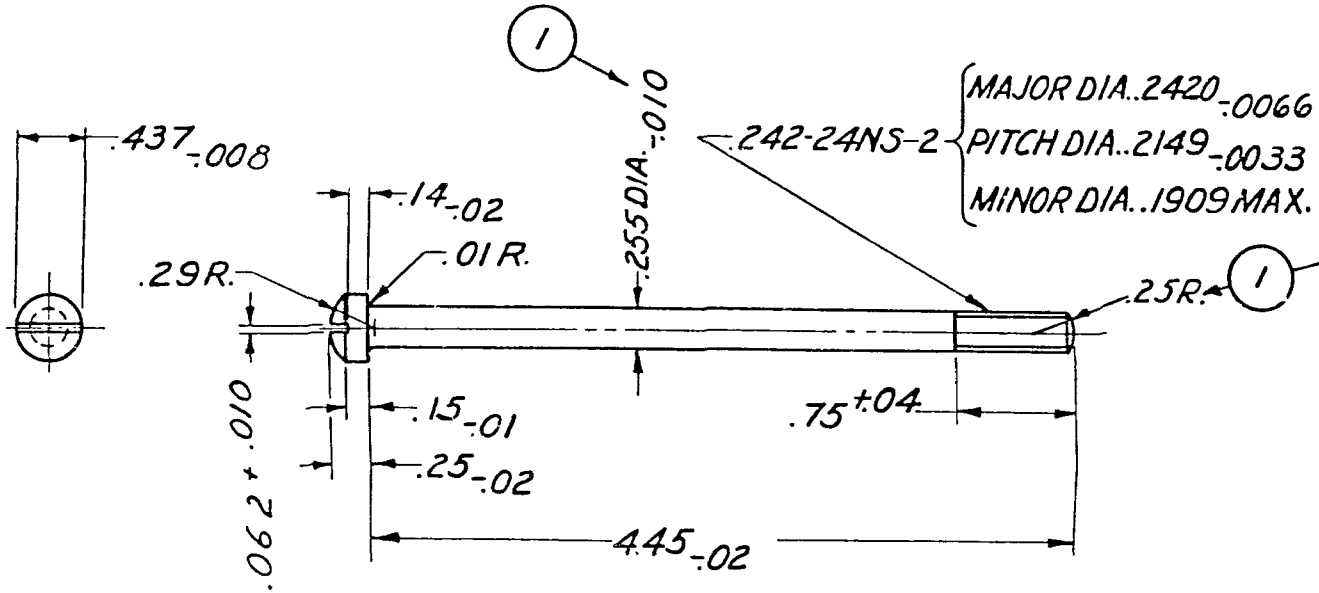

DR'G. PERTAINS TO

51-63	.45 S.M.G.-M28A1
51-116	.45 S.M.G.-M1
51-124	.45 S.M.G.-M1A1

SCREW, REAR GRIP (A 5153011 ~~A 153011~~)
FINISH "f"

D'FTSMAN	TRACER	L'OG. D'FTSMAN
	H.M.F.	G.J.T.
CHECKER	S.A. E.G.W.	CHIEF D'FTSMAN S.A. Q.O.

SUBMITTED:-
LT. COL. ORD. DEPT., U. S. A.

APPROVED BY ORDER OF THE CHIEF OF ORDNANCE:-
COL. ORD. DEPT., U. S. A.
ORDNANCE DEPT., U. S. A.

1
A5153011
REF. DRG. A.O.C. N 42-26

TOLERANCE ±.01 ALLOWED ON ALL DIMENSIONS UNLESS OTHERWISE SPECIFIED.

SCALE 1/1

~~A 153011~~

SUPERSEDES A153011