~~A 152989~~

A5152989

HEAT TREATMENT & FINAL FINISH	PHYSICAL PROPERTIES					
	Y.P.		RED.		ROCK.	
	T.S.		BR.			
	EL.2					

DEC. 31, 1941

REVISIONS

1	CONVERSION 10-12-51		

DR'G. PERTAINS TO

51-63	.45 S.M.G.-M28A1

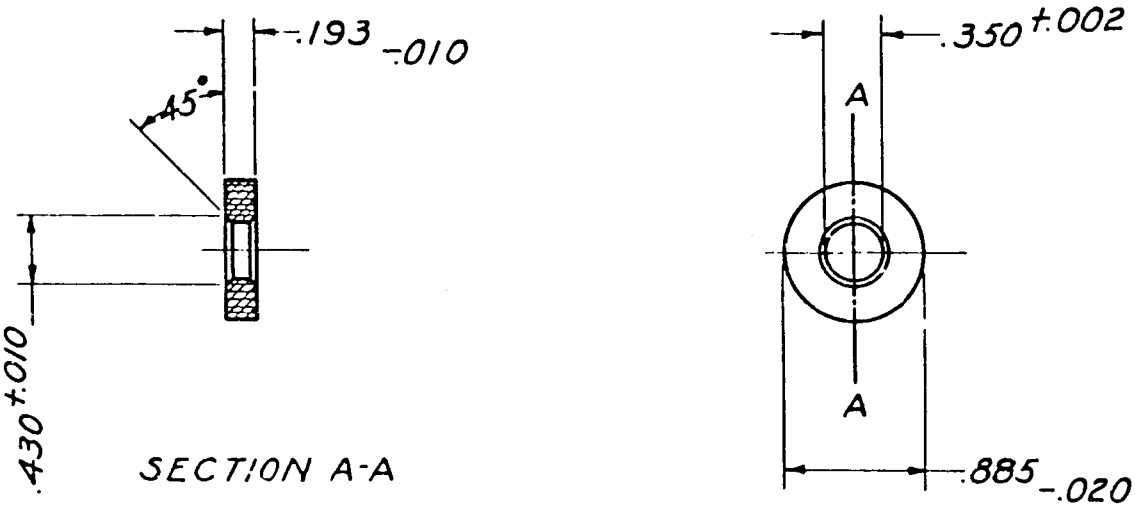

D'FTSMAN	TRACER	L'DG. D'FTSMAN
H.M.F.	H.M.F.	B.J.H.
CHECKER	S.A. E.E.W.	CHIEF D'FTSMAN
E.M.		S.A. O.O.

SUBMITTED:-

LT. COL. ORD. DEPT., U. S. A.

APPROVED BY ORDER OF THE CHIEF OF ORDNANCE:-

COL. ORD. DEPT., U. S. A.

ORDNANCE DEPT., U. S. A.

PAD, BUFFER ~~A 152989~~ 5152989

REF. DRG. A.O.C. 45-1-21

TOLERANCE ±.01 ALLOWED ON ALL DIMENSIONS UNLESS OTHERWISE SPECIFIED.

SCALE 2/1

A5152989

~~A152989~~