~~A 152969~~

A 5152969

HEAT TREATMENT & FINAL FINISH	PHYSICAL PROPERTIES						OCTOBER 20, 1941
	Y.P.		RED.		ROCK.		REVISIONS
	T.S.		BR.				1 FS 6-12-50
	EL.2						2 CONVERSION 10-17-51

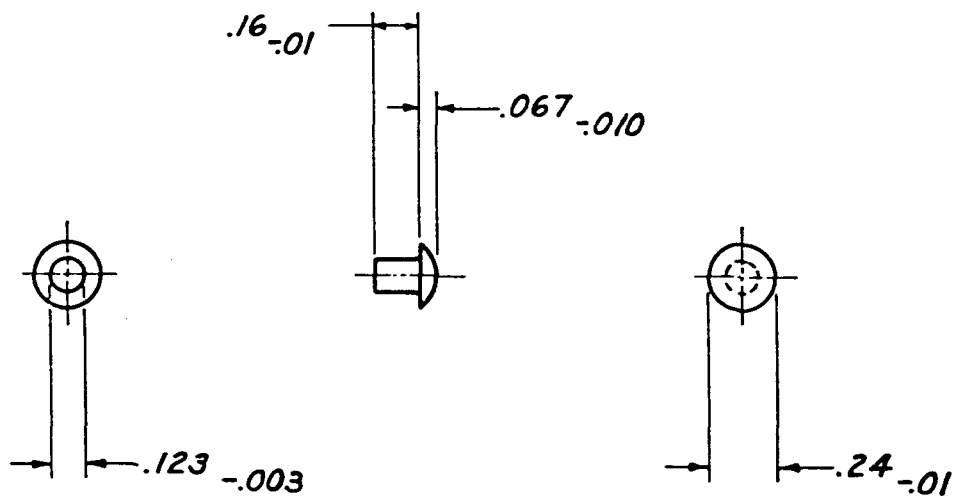

RIVET, CARTRIDGE DEFLECTOR
RIVET, MAGAZINE BODY SLIDE
RIVET, MAGAZINE COVER SLIDE
STEEL FS1010 FED SPEC QQ-S-633
FINISH "f"

5152969
~~A 152969~~

REF: UNITED AIR CLEANER CO. DRG. NO. 50,005

TOLERANCE ±.01 ALLOWED ON ALL DIMENSIONS UNLESS OTHERWISE SPECIFIED.

SCALE 2/1

A5152969 ~~A 152969~~

DR'G. PERTAINS TO

D35505	MAGAZINE, DRUM, 50 CARTRIDGE
C64358	BODY, MAGAZINE, ASM
C64359	BODY, MAGAZINE W/SLIDE, ASSEMBLY
C64361	COVER, MAGAZINE W/SLIDE, ASSEMBLY

D'FTSMAN	TRACER	L'DG D'FTSMAN
H.M.F.	H.M.F.	E.J.M.
CHECKER		CHIEF D'FTSMAN
E.M.	E.G.W.	

SUBMITTED:-
LT. COL. ORD. DEPT., U. S. A.

APPROVED BY ORDER OF THE CHIEF OF ORDNANCE:-
COL. ORD. DEPT., U. S. A.

ORDNANCE DEPT., U. S. A.

SUPERSEDES A152969