~~A152965~~

A5152965

HEAT TREATMENT & FINAL FINISH	PHYSICAL PROPERTIES						OCTOBER 20, 1941
	Y.P.		RED.		ROCK.		REVISIONS
	T.S.		BR.				1 FS 6-12-50
	EL. 2						2 CONVERSION 10-17-51

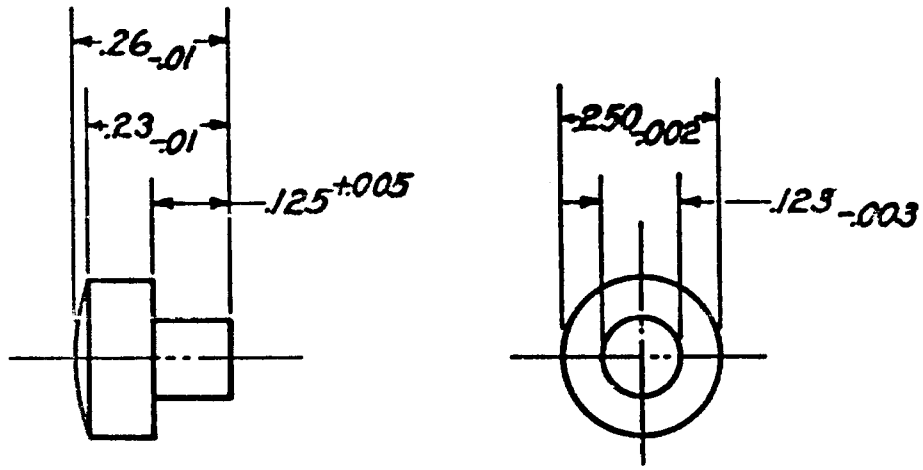

DR'G. PERTAINS TO	
D35505	MAGAZINE, DRUM, 50 CARTRIDGE
C64358	BODY, MAGAZINE, ASSEMBLY

D'FTSMAN	TRACER	L'DG. D'FTSMAN
CHECKER		CHIEF D'FTSMAN

SUBMITTED:-

LT. COL., ORD. DEPT., U. S. A.

APPROVED BY ORDER OF THE CHIEF OF ORDNANCE:-

COL. ORD. DEPT., U. S. A.

ORDNANCE DEPT., U. S. A.

PILOT, COVER 5152965 ~~A152965~~

STEEL FS B1112 FED SPEC QQ-S-633

FINISH

MANUFACTURING COMPONENT

REF: UNITED AIR CLEANER CO. DRG. NO. 50,001

TOLERANCE ±.01 ALLOWED ON ALL DIMENSIONS UNLESS OTHERWISE SPECIFIED.

SCALE 4/1

A5152965

~~A152965~~

SUPERSEDES A152965