~~A152964~~

A 5152964

HEAT TREATMENT & FINAL FINISH	PHYSICAL PROPERTIES						OCTOBER 20, 1941
HEAT TO 1420°F. QUENCH IN OIL. DRAW AT 770°F.	Y.P.		RED.		ROCK.	C-43-45	REVISIONS
	T.S.		BR.				1 CONVERSION 10-17-51
	EL.2						

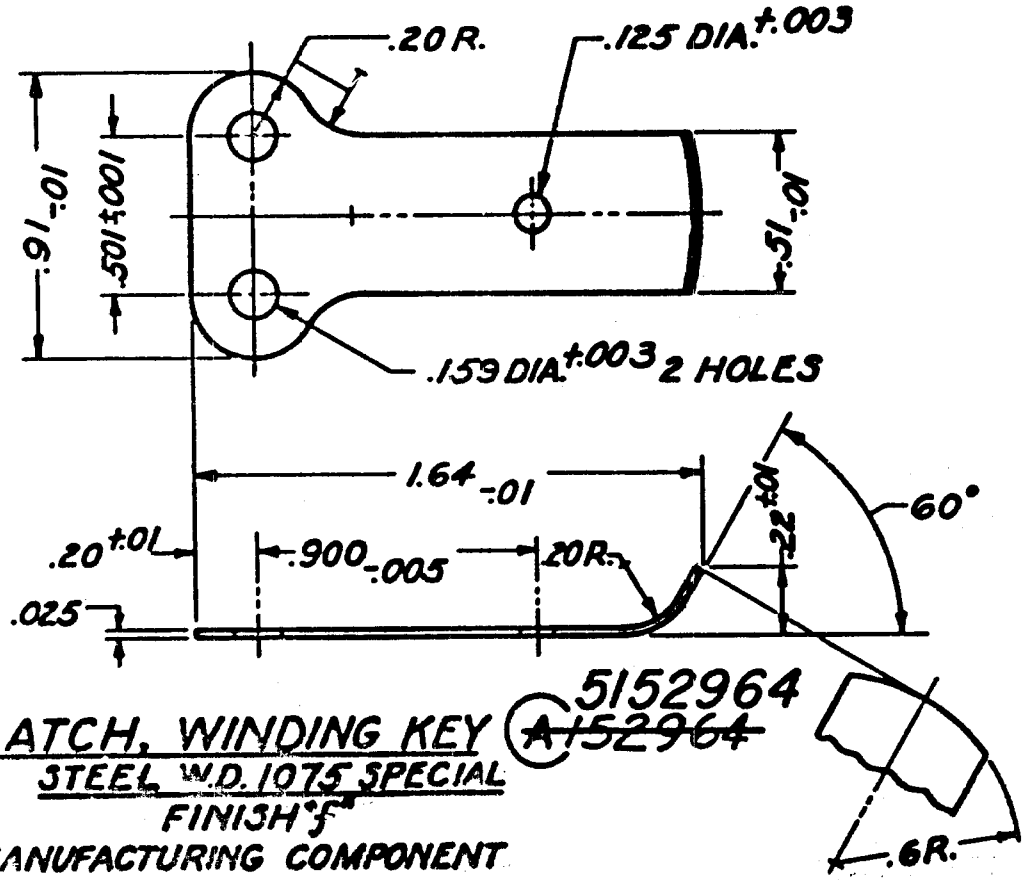

LATCH, WINDING KEY ~~A152964~~ 5152964

STEEL W.D. 1075 SPECIAL

FINISH "F"

MANUFACTURING COMPONENT

REF: UN. AIR CL. CO. DRG. NO. 50,009

TOLERANCE ± ALLOWED ON ALL DIMENSIONS UNLESS OTHERWISE SPECIFIED

SCALE 2/1

A5152964

~~A152964~~

DR'G. PERTAINS TO

D35505	MAGAZINE, DRUM, 50 CARTRIDGE
B147656	LATCH, WINDING, KEY, ASSEMBLY

D'FTSMAN	TRACER	L'DG. D'FTSMAN
V.W.G.	H.M.F.	C.J.F.
CHECKER	E.A.	CHIEF D'FTSMAN
C.M.	E.G.W.	E.A.

SUBMITTED:-

LT. COL. ORD. DEPT., U. S. A.

APPROVED BY ORDER OF THE CHIEF OF ORDNANCE:-

COL. ORD. DEPT., U. S. A.

ORDNANCE DEPT., U. S. A.

SUPERSEDES A152964